Construction

P100V,P130V

P100V

Item	Name	Part No.	Standard	Qty
4	O-ring	007933817	AS568-338(NBR,Hs70)	1
5	Shaft seal	40011048	————	1
7	O-ring	007991219	AS568-912(NBR,Hs90)	1
10	O-ring	007991219	AS568-912(NBR,Hs90)	1
18	Gasket	40011573	————	1
28	O-ring	007924119	AS568-241(NBR,Hs90)	2
35	O-ring	007991019	AS568-910(NBR,Hs90)	1
38	O-ring	007991019	AS568-910(NBR,Hs90)	1
41	O-ring	007901119	AS568-011(NBR,Hs90)	2
43	O-ring	007901819	AS568-018(NBR,Hs90)	1

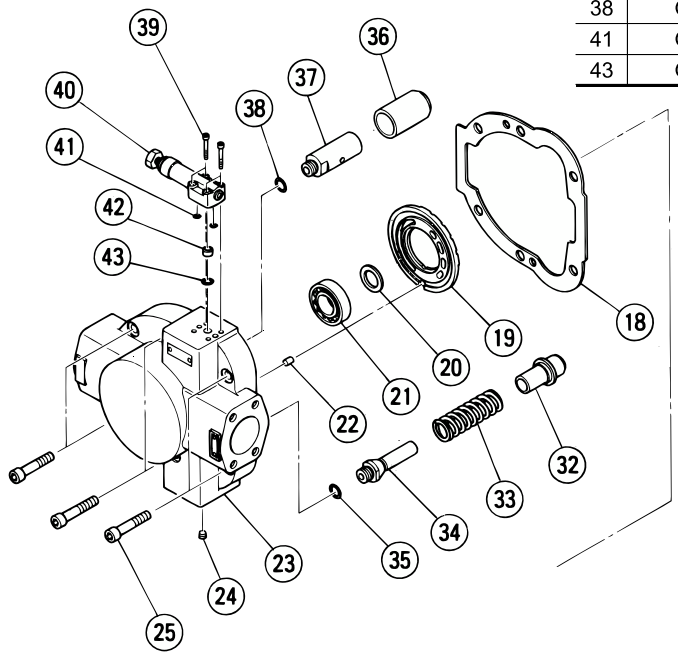

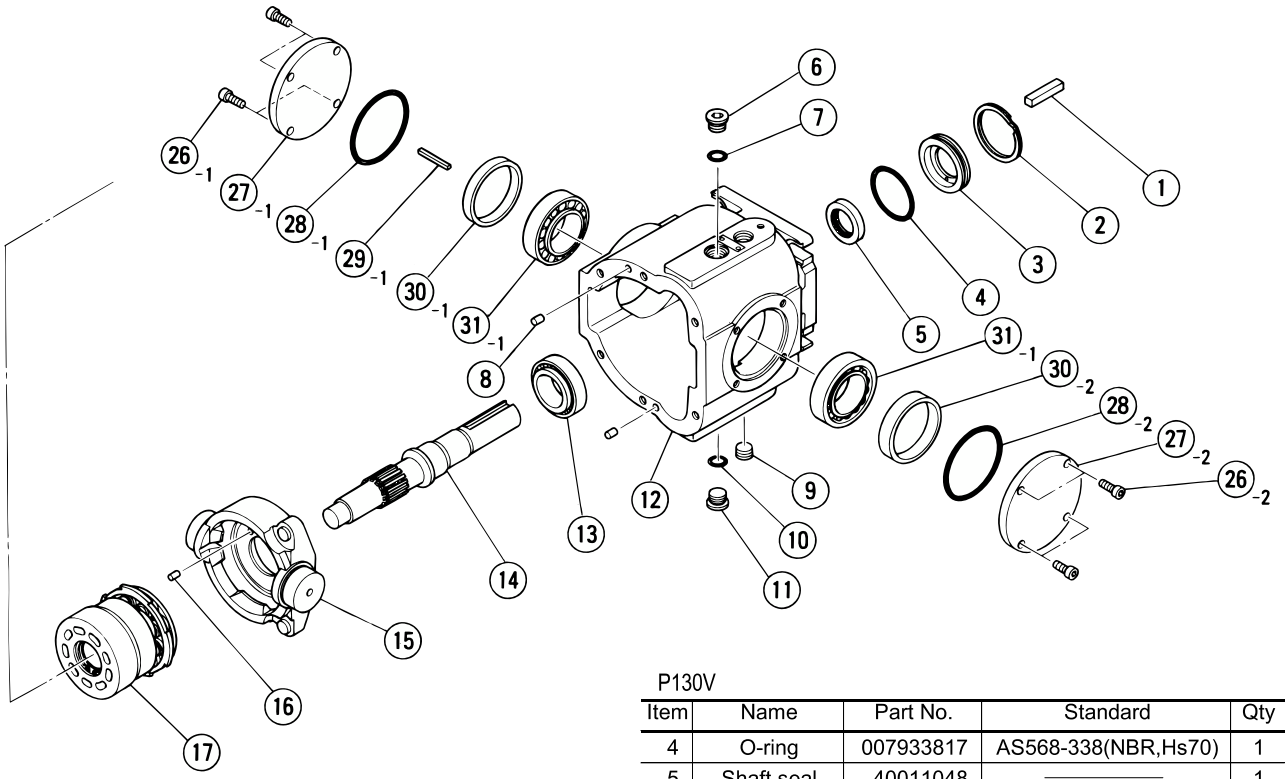

P130V

Item	Name	Part No.	Standard	Qty
4	O-ring	007933817	AS568-338(NBR,Hs70)	1
5	Shaft seal	40011048	————	1
7	O-ring	007991219	AS568-912(NBR,Hs90)	1
10	O-ring	007991219	AS568-912(NBR,Hs90)	1
18	Gasket	40011616	————	1
28	O-ring	007924719	AS568-247(NBR,Hs90)	2
35	O-ring	007991019	AS568-910(NBR,Hs90)	1
38	O-ring	007991019	AS568-910(NBR,Hs90)	1
41	O-ring	007901119	AS568-011(NBR,Hs90)	2

Rotating Group Kits

Model	P100V	P130V
Kit P/N	40038744	40058363
R rotation No.19 w/wafer plate	40048836	40058361
L rotation		

Low Noise, High Pressure Variable Displacement Piston Pump PH Series

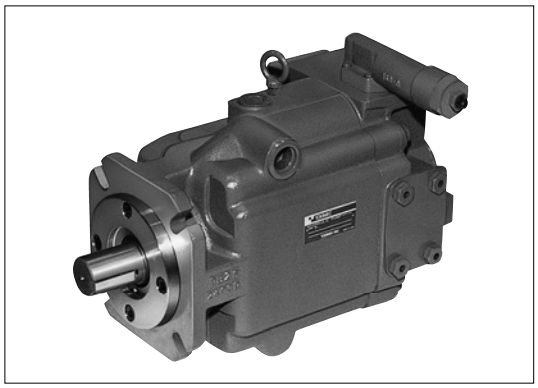

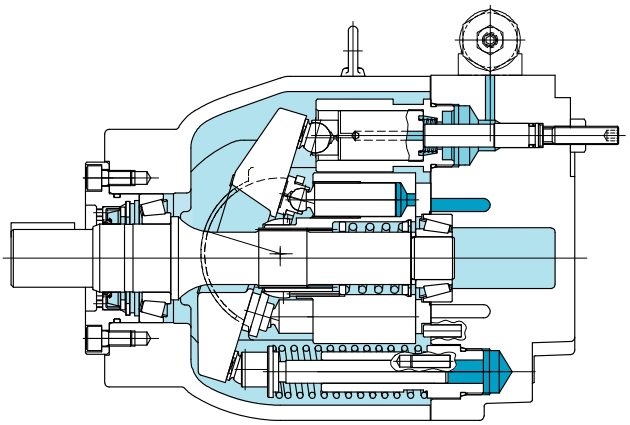

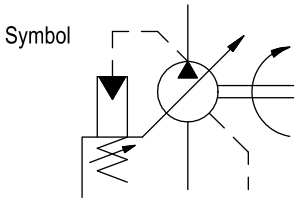

Model Code

PH100 - MS (*) (F) YR - 20 - CH - (D) - 10 - (S38)

1	2	3	4	5	6	7	8	9	10	11	12

1 PH Series variable displacement piston pump
PH80,PH100,PH130,PH170

2 Port specifications
M: standard

3,4 Code for double pump
S: single pump
*Contact TOKIMEC for double pump configurations

5 Pump mounting
Omitted: flange mounting
F: foot bracket

6 Shaft end configuration
Y: long shaft w/SAE square key

7 Rotation (viewed from shaft end)
R: right rotation (clockwise)
L: left rotation (counter-clockwise)

8 Pump design no.

9 Pump control
CH : pressure compensator
CGH : remote pressure compensator
CVH : load sensing
TL : torque limiter (low)
TH : torque limiter (high)
EDHS : electric direct control (flow,pressure)

10 Max. displacement adjuster
Omitted : none
D : w/ adjuster

11 Control valve design no.

12 Suffix
S38 : for TL/TH models
Omitted : other

Specifications

Model	Max. Displ. cm^3/rev	Working Pressure MPa	Max. Speed min^{-1}	Min. Speed min^{-1}	Weight kg
PH80	80	Rated 28 Intermit. 30	1800	600	51
PH100	100				70
PH130	130				95
PH170	170	Rated 21 Intermit. 22.5			

- Intermittent pressure means pressure less than 10% of duty cycle (max. 6 seconds).
  Contact Tokimec for applications which exceed rated
- Rated pressure of electric direct control EDHS is 21 MPa.
  This pressure is controlled by relief valve setting.
- Weight is for CH type (pressure compensator).
- Contact TOKIMEC when using water gylcol

Controls (PH Series)

Pump Control Method		Characteristics Curve	Remarks	Symbol
Type	Code			
Pressure compensator	**C H**	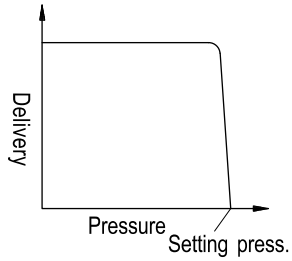	• When pump delivery pressure rises to the setting pressure, pump flow is automatically reduced to the minimum flow needed to maintain the pressure. • Pressure can be set with manual adjustment.	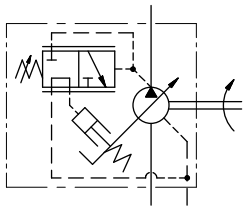
Remote pressure compensa-tor	**C GH**	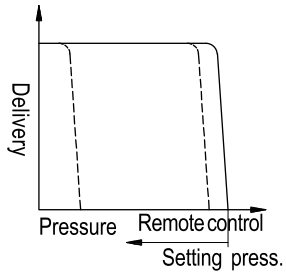	CGH • Pressure setting of compensator control can be set with a remote control valve. • Pressure compensator type relief valve. Pressure setting can be adjusted manually.	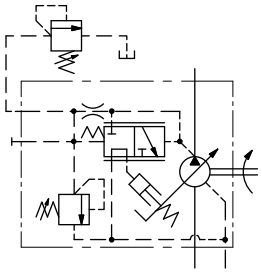
Load sensing	**CV H**	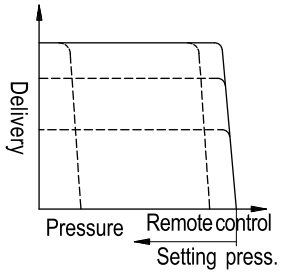	• Pump delivery automatically controlled to maintain constant differential pressure across flow control valve located downstream of pump. Energy-saving type pump control which supplies minimum flow and pressure necessary to drive load(actuator). • Pressure compensator safety relief valve integrated. Setting pressure can be manually set. • Remote pressure compensator control possible with externally installed remote control valve.	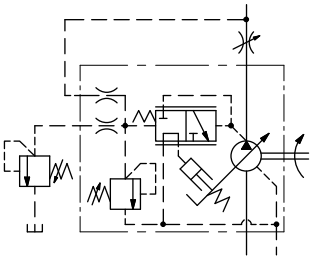
Torque limiter (low torque/ high torque)	**TL / TH**	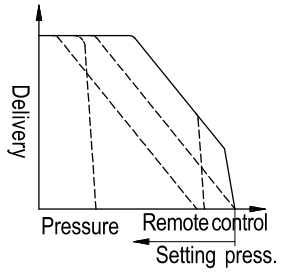	• Pump delivery automatically controlled to match load capacity of the electric motor. Flow setting can be manually adjusted. • Pressure compensator safety relief valve integrated. Setting pressure can be manually set. • Remote pressure compensator control possible with externally installed remote control valve.	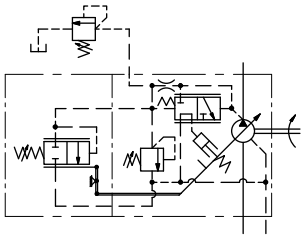
Electric direct control	**EDH S**	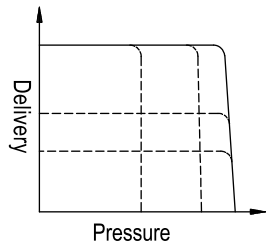	• In flow control mode, pump delivery is controlled by flow control signal and as pump delivery pressure approaches the pressure setting signal, mode automatically switches to pressure control. • Special controller EDA-PQ necessary. • Pressure compensator safety relief valve integrated. Setting pressure can be manually set.	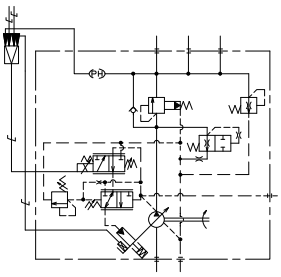
Maximum displace-ment adjustment function	**D**	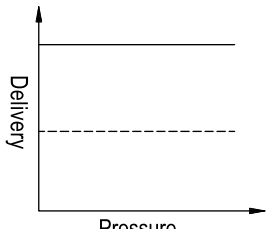	•Maximum displacement adjustment with adjustment screw on pump.	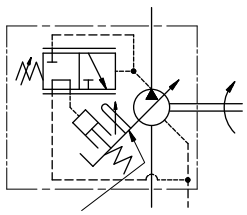 Displacement adjuster symbol

Max displacement adjuster characteristices

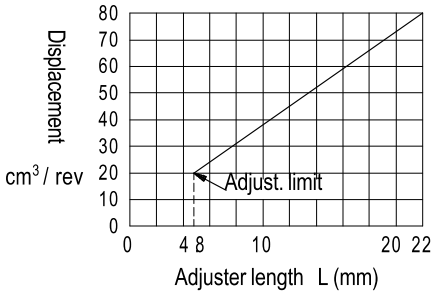

PH80 SERIES

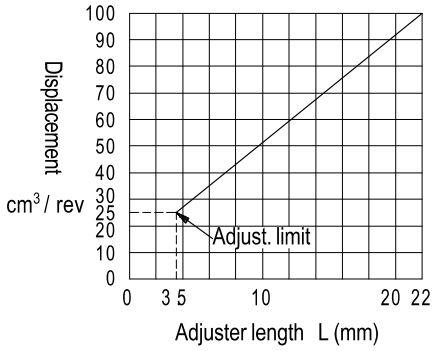

PH100 SERIES

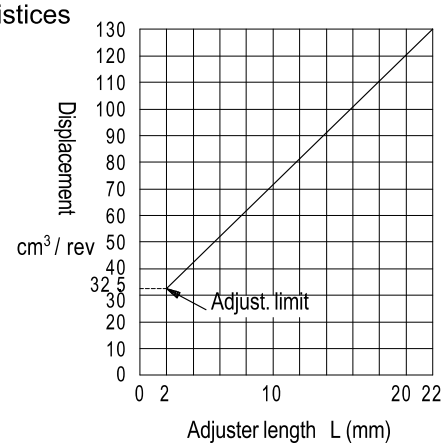

PH130 SERIES

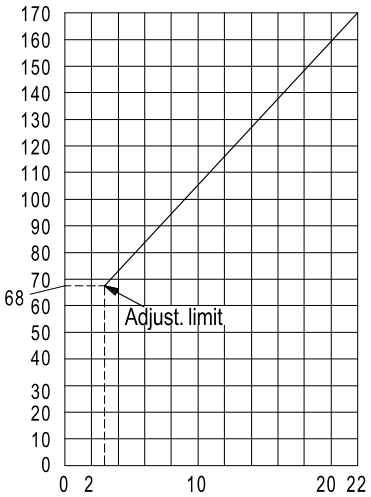

PH170 SERIES

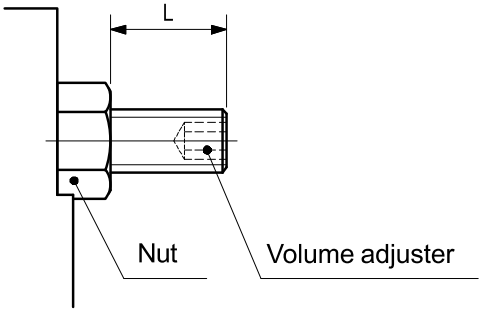

Characteristics Curve (at 20 mm²/s)

Pressure, efficiency, delivery, input power (1800min-1)

PH80

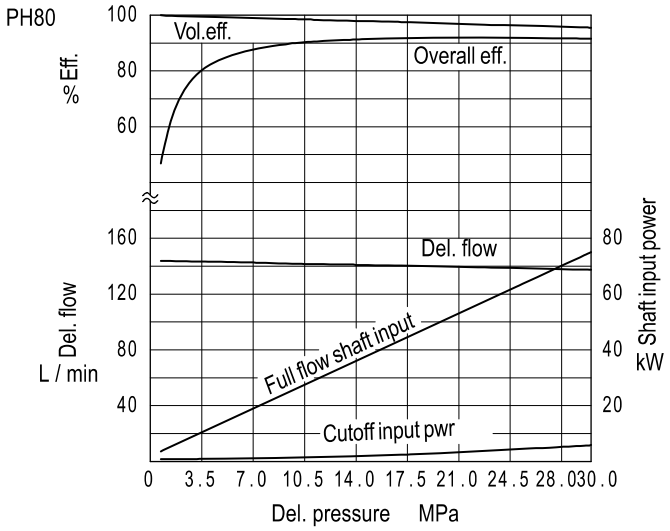

PH100

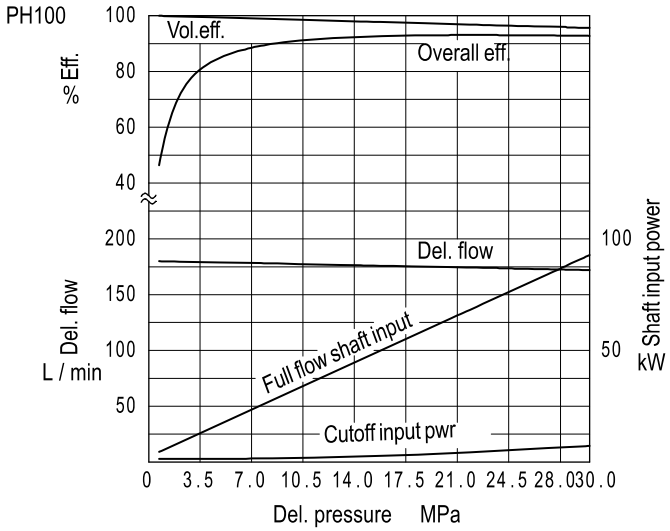

PH130

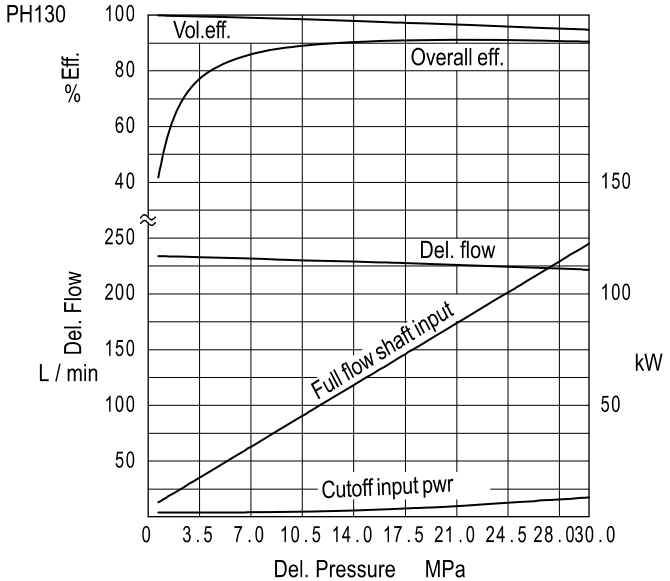

Pressure, noise characteristics (1 m from pump rear)

PH80

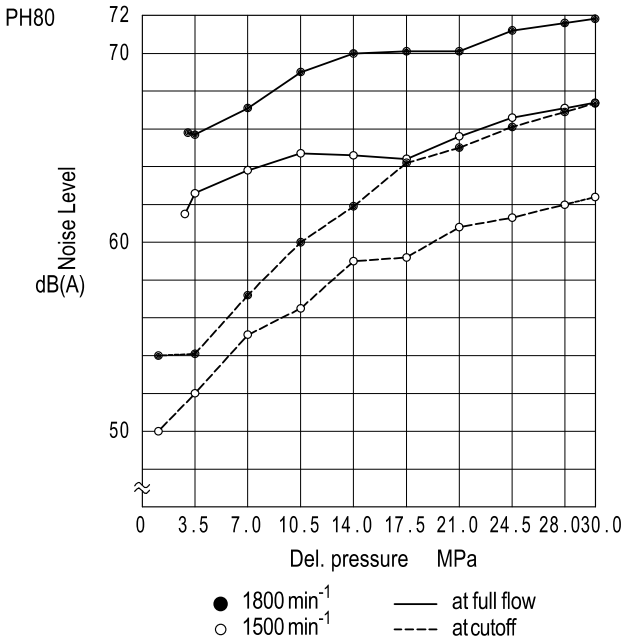

PH100

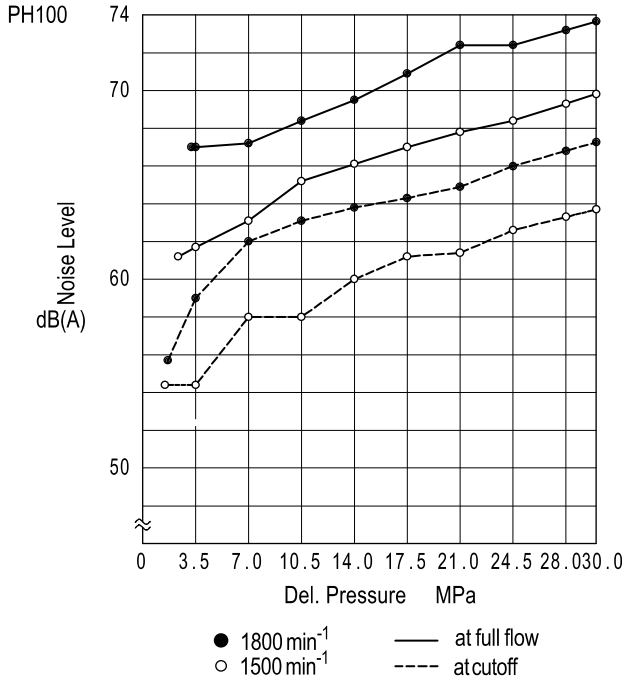

PH130

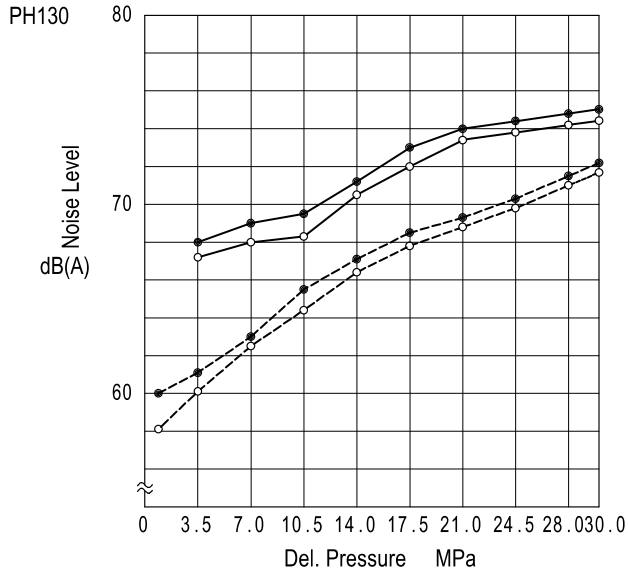

Characteristics Curve (at 20mm²/s)

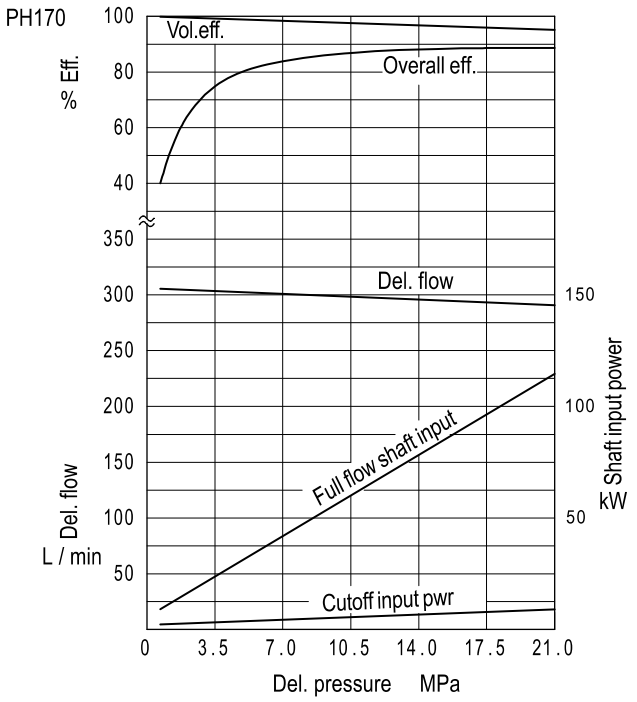

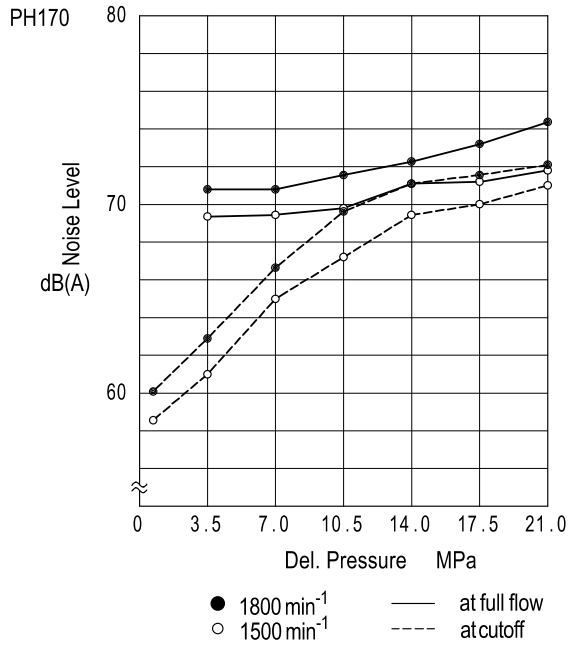

Pressure, drain flow characteristics (1800 min⁻¹, 20mm²/s)

AT FULL FLOW

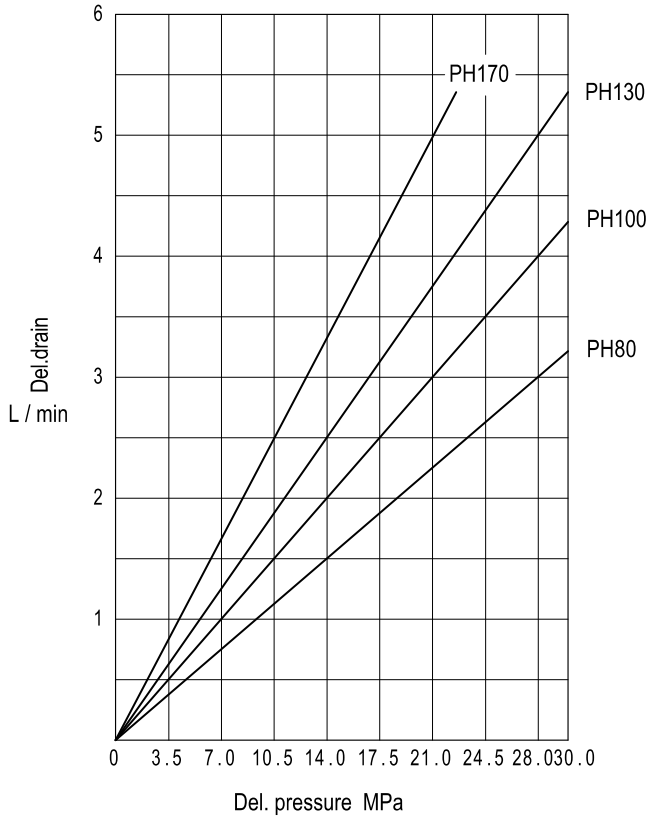

AT CUTOFF (CH:Pressure compensator)

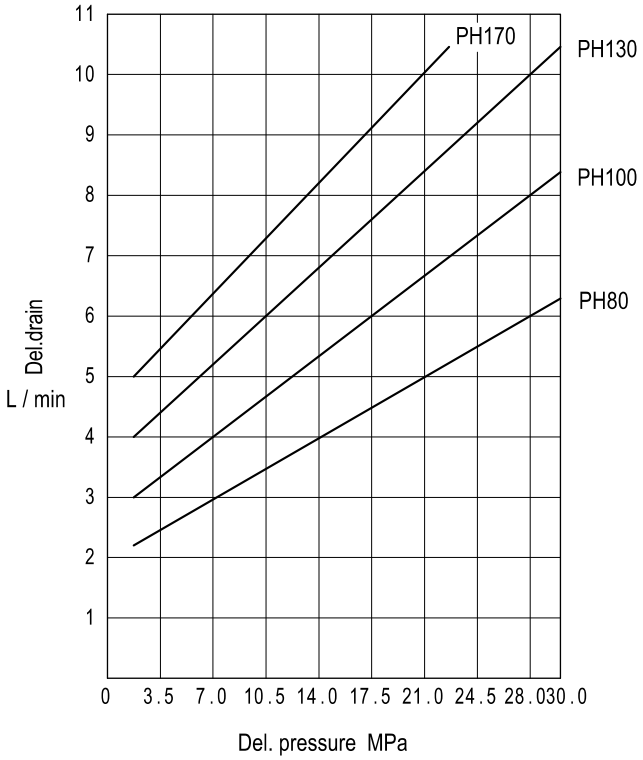

Dimensions

PH80

NOTE:
Right rotation model shown.For left rotation, control valve shall move to symmetrical position from center line.

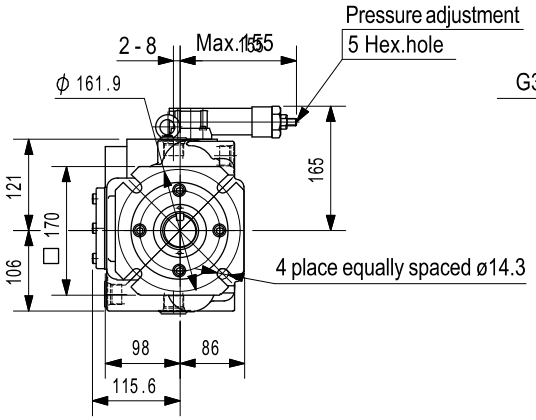

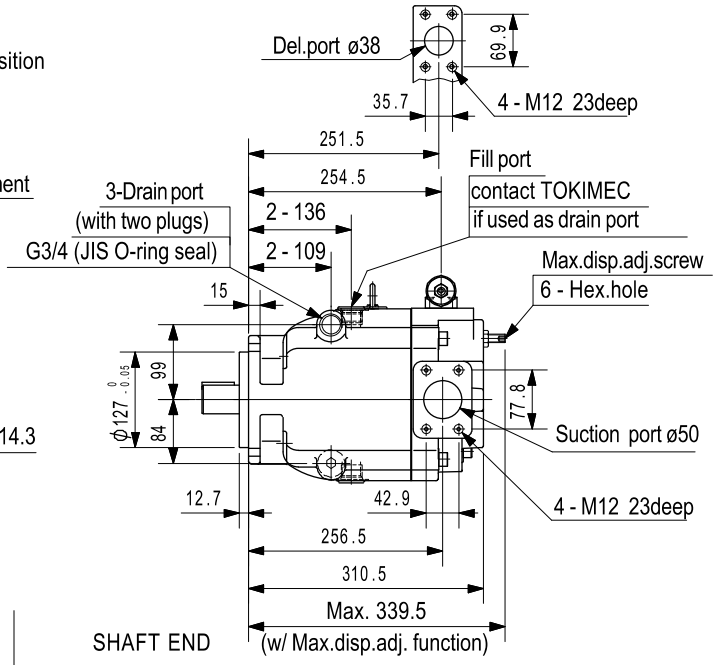

FOOT MOUNT

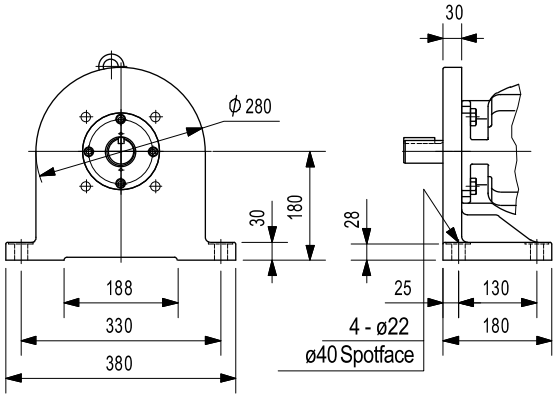

SHAFT END

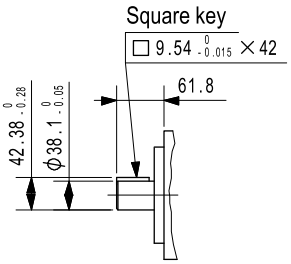

SHAFT END "X"

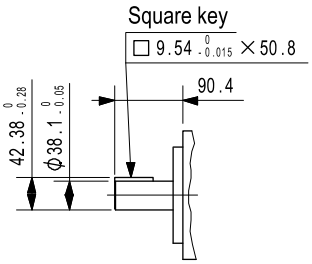

SHAFT END "Y"

PH100

NOTE:
Right rotation model shown.For left rotation, control valve shall move to symmetrical position from center line.

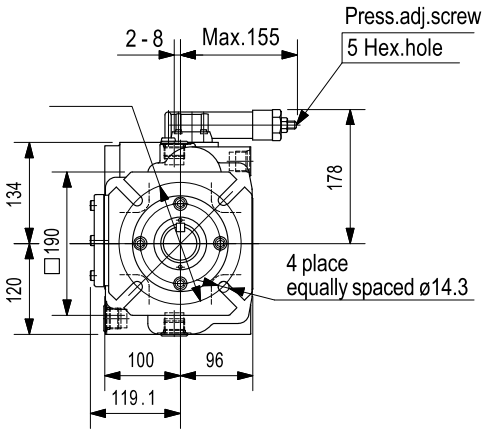

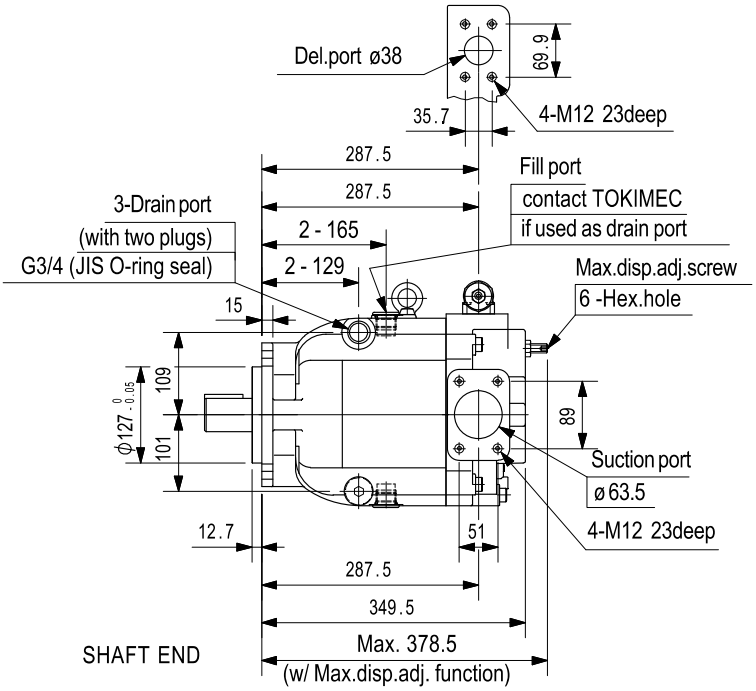

FOOT MOUNT

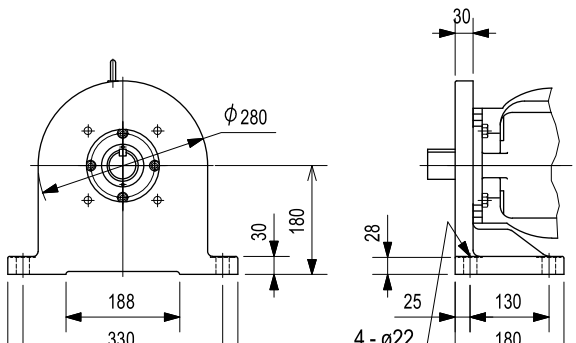

SHAFT END

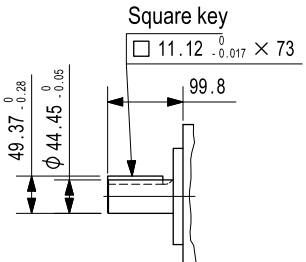

Dimensions

PH130
PH170

NOTE:
Right rotation model shown.For left rotation, control valve shall move to symmetrical position from center line.

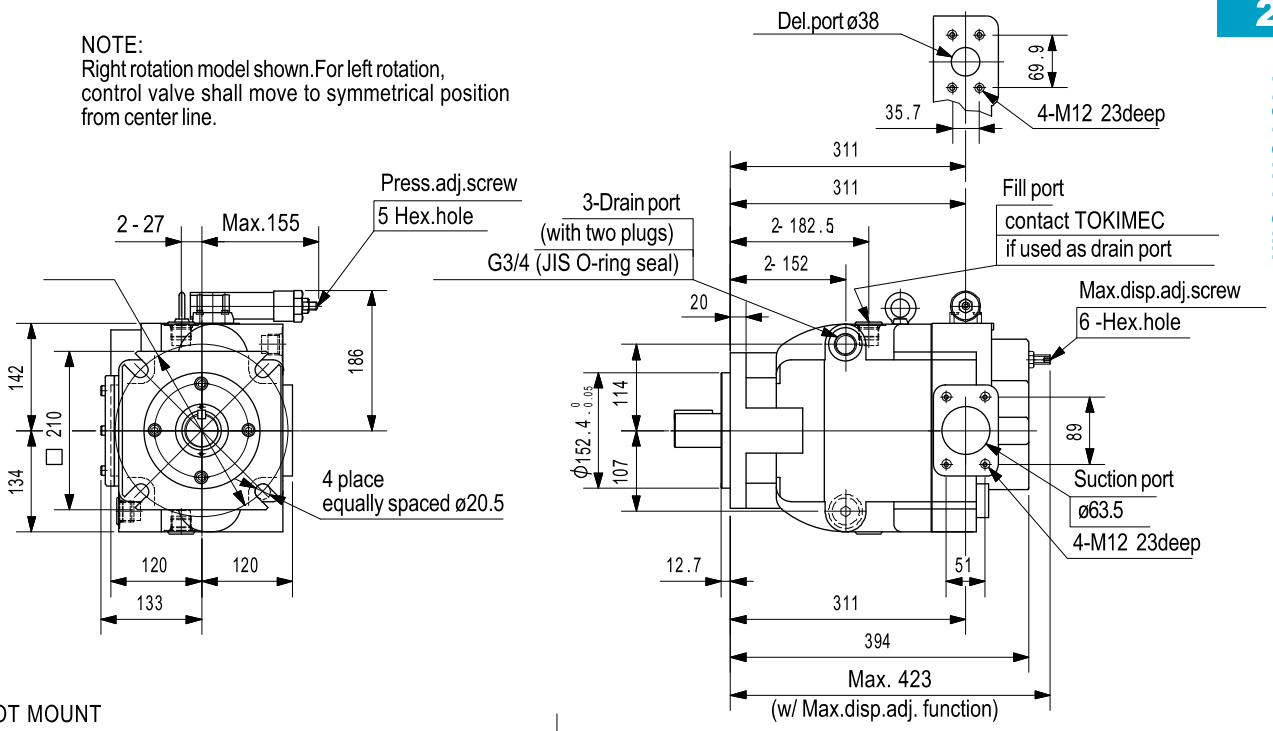

FOOT MOUNT

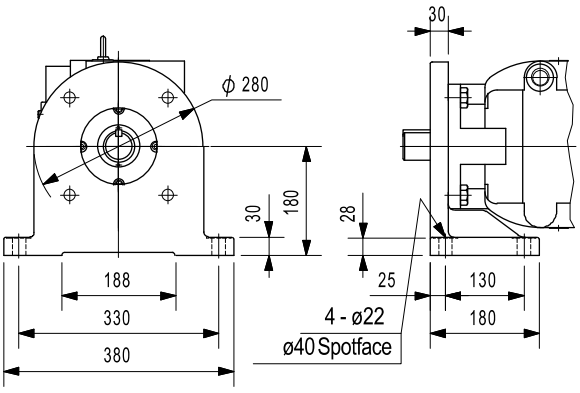

SHAFT END

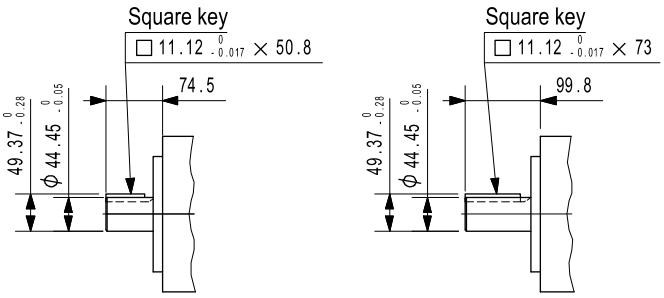

SHAFT END "X"

SHAFT END "Y"

Notes on Operation

- **See piston pump Notes on Operation (page A4, A5)**

Construction

PUMP

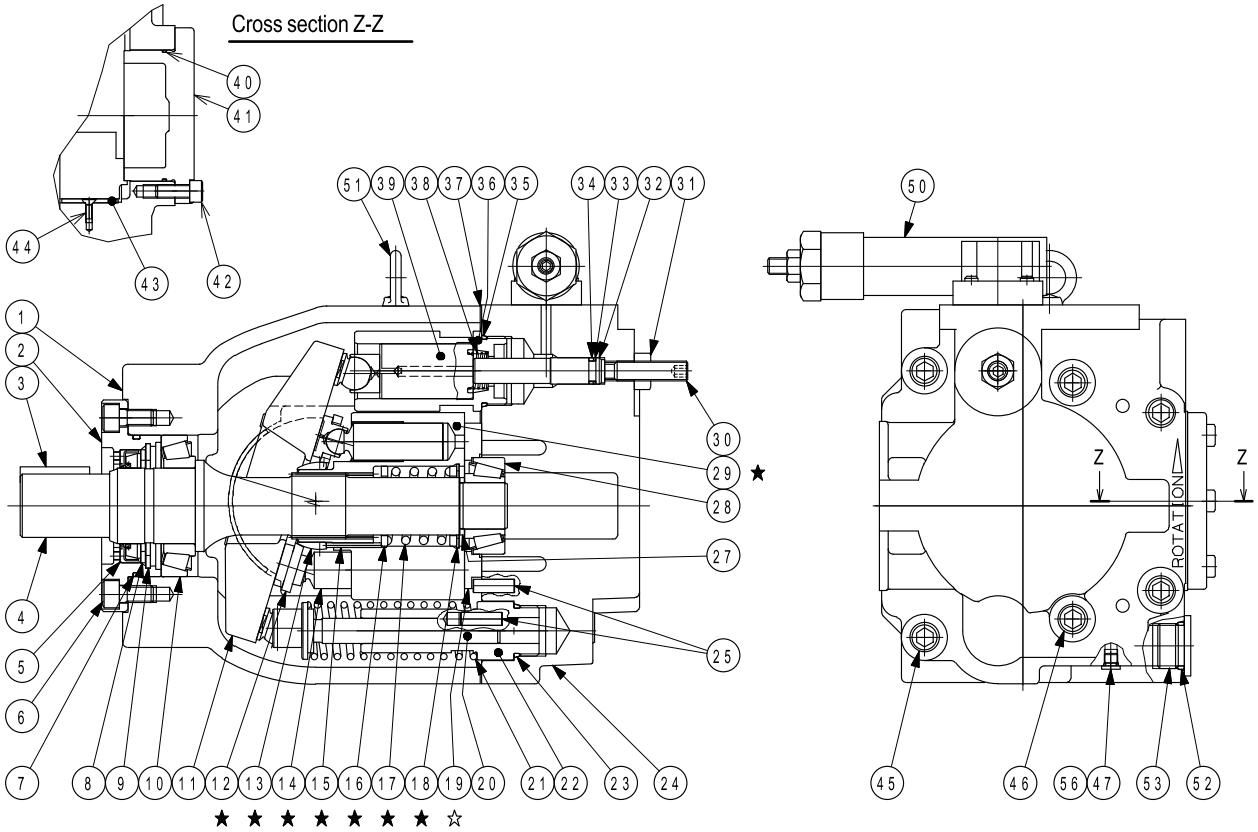

PH80

Item	Name	Part No.	Standard	Qty
5	Shaft seal	VA19648	————	1
7	O-ring	008051219	JIS B 2401 1B-G80	1
23	O-ring	007991419	AS568-914(NBR,Hs90)	1
33	Backup ring	008101202	JIS B 2407 T2-P12	1
34	O-ring	008001219	JIS B 2401 1B-P12	1
35	O-ring	007992019	AS568-920(NBR,Hs90)	1
37	Gasket	40017811	————	1
40	O-ring	007904119	AS568-041(NBR,Hs90)	1
52	O-ring	008002219	JIS B 2401 1B-P22.4	3
56	O-ring	007990219	AS568-902(NBR,Hs90)	4

PH100

Item	Name	Parts No.	Standard	Qty
5	Shaft seal	40011048	————	1
7	O-ring	008051319	JIS B 2401 1B-G85	1
23	O-ring	007991419	AS568-914(NBR,Hs90)	1
33	Backup ring	008101202	JIS B 2407 T2-P12	1
34	O-ring	008001219	JIS B 2401 1B-P12	1
35	O-ring	007992019	AS568-920(NBR,Hs90)	1
37	Gasket	40021003	————	1
40	O-ring	007904319	AS568-043(NBR,Hs90)	1
52	O-ring	008002219	JIS B 2401 1B-P22.4	3
56	O-ring	007990219	AS568-902(NBR,Hs90)	4

PH130/PH170

Item	Name	Parts No.	Standard	Qty
5	Shaft seal	40011048	————	1
7	O-ring	008051419	JIS B 2401 1B-G90	1
23	O-ring	007991419	AS568-914(NBR,Hs90)	1
33	Backup ring	008101202	JIS B 2407 T2-P12	1
34	O-ring	008001219	JIS B 2401 1B-P12	1
35	O-ring	007992019	AS568-920(NBR,Hs90)	1
37	Gasket	40024503	————	1
40	O-ring	007904519	AS568-045(NBR,Hs90)	1
52	O-ring	008002219	JIS B 2401 1B-P22.4	3
56	O-ring	007990219	AS568-902(NBR,Hs90)	4

Rotating Group Kit

Model	PH80	PH100	PH130	PH170
Rotating group kit (★marked parts)	40048885	40038843	40058177	40068811
Right hand rotating group kit(★,☆marked parts)	40068523	40068507	40068562	40068854
Left hand rotating group kit(★,☆marked parts)	40068524	40068508	40068563	40068855

Seal kit for pump (not including control valves)

Model	PH80	PH100	PH130/PH170
Seal kit part no.	40068287	40068288	40068289

Construction

Pressure Compensator (CH: pressure compensator)

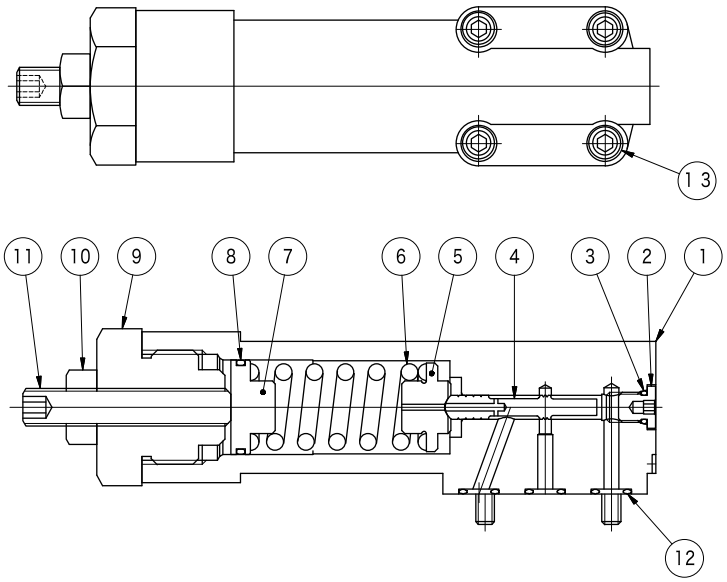

Item	Name	Parts No.	Standard	Qty
3	O ring	007990219	AS568-902(NBR,Hs90)	1
8	O ring	007902019	AS568-020(NBR,Hs90)	1
12	O ring	007901119	AS568-011(NBR,Hs90)	3